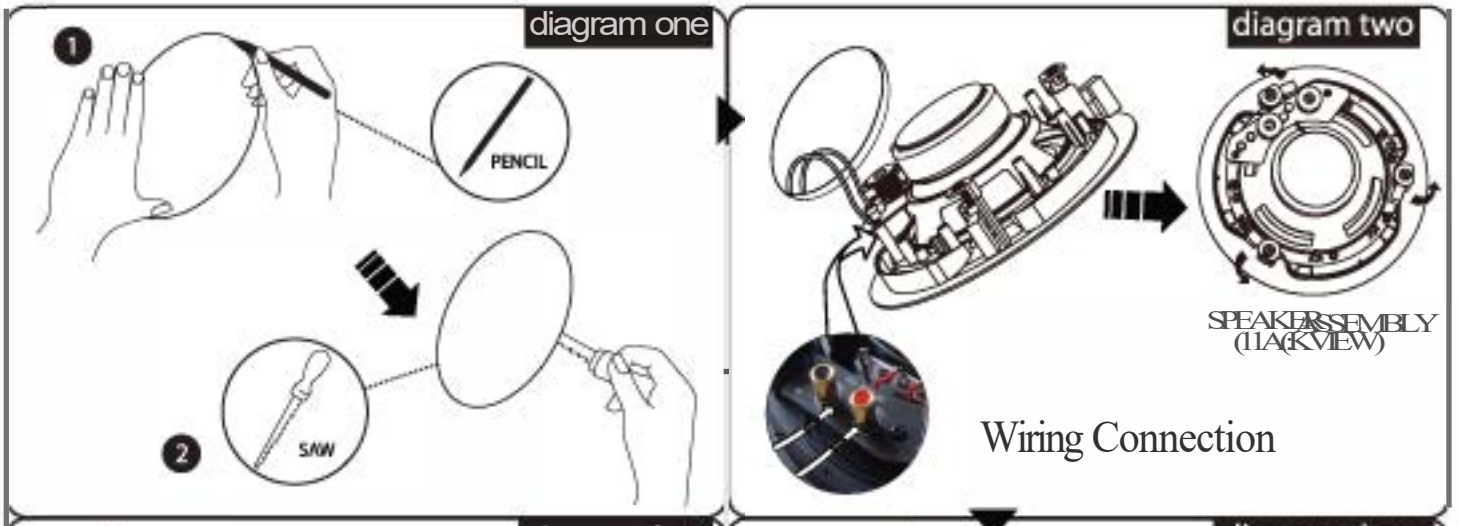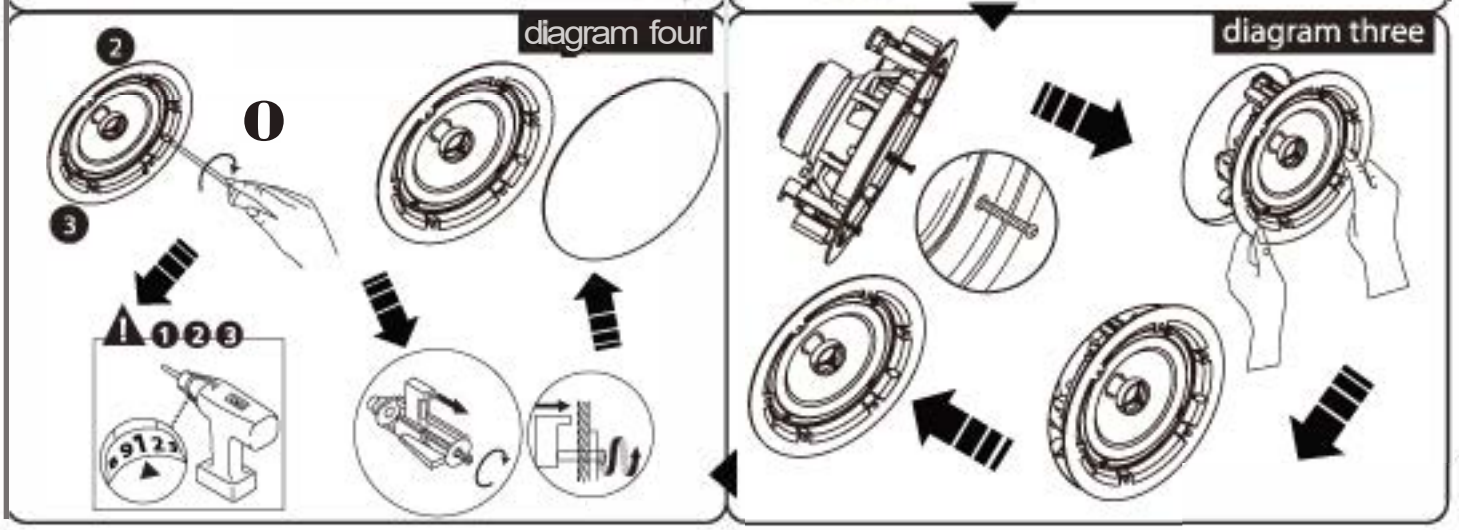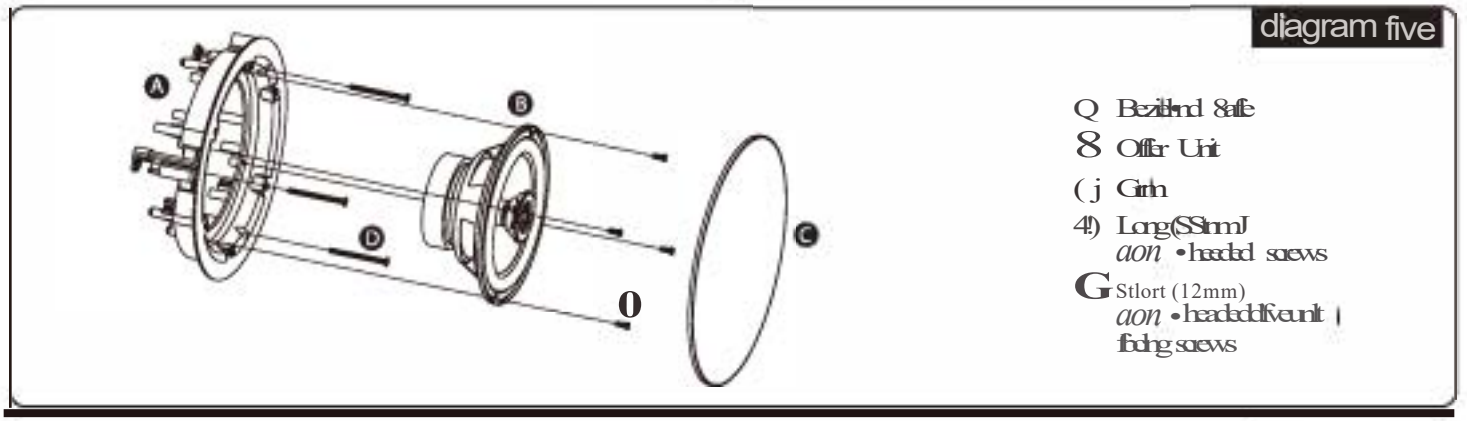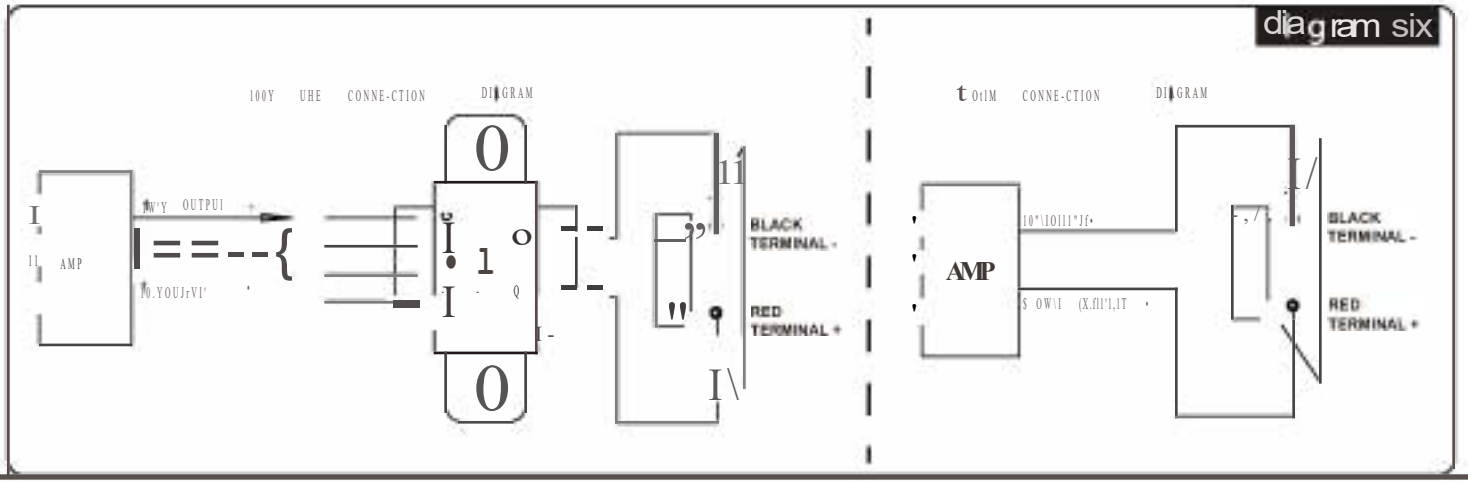INSTALLATION INSTRUCTIONS