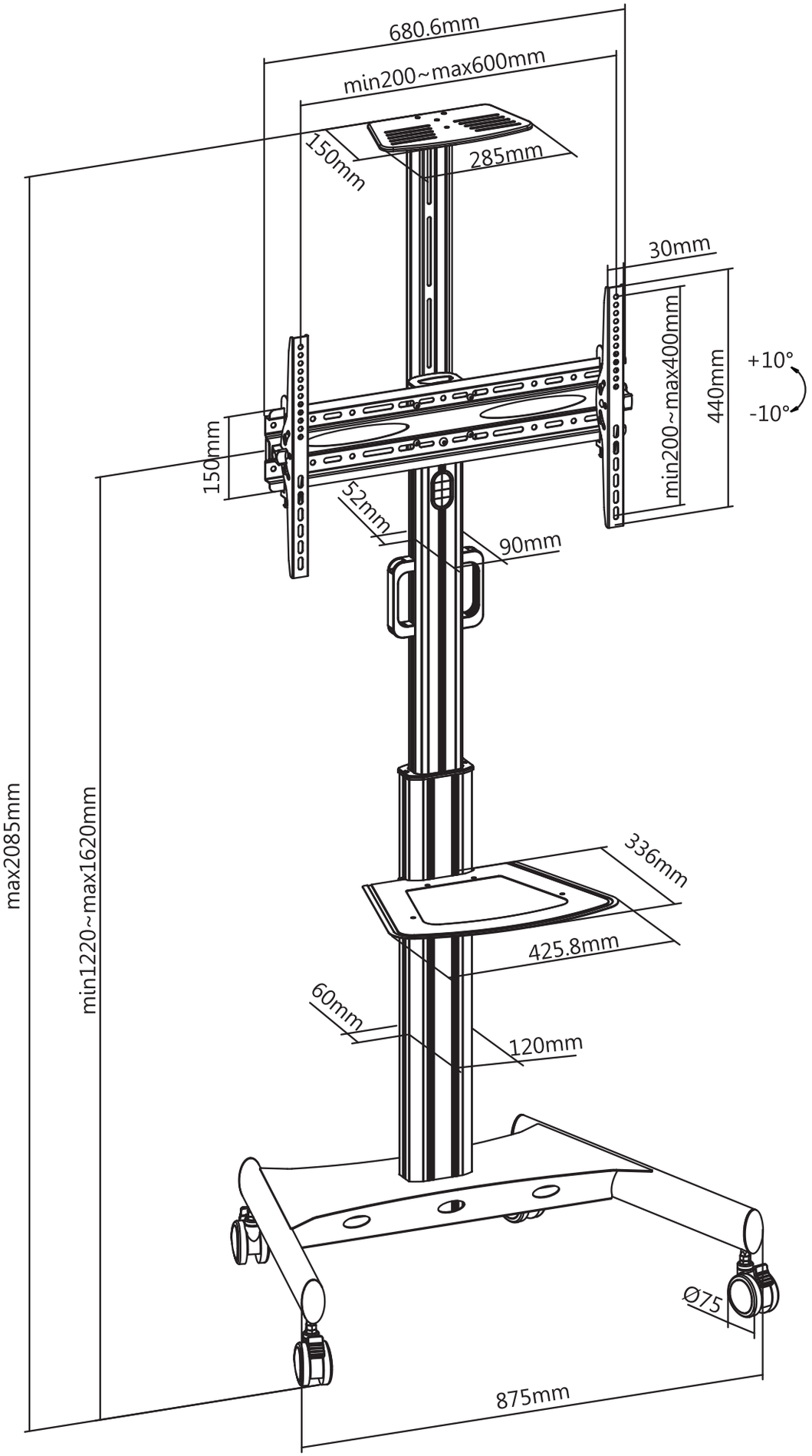
680.6mm
min200~max600mm
150mm
285mm
30mm
min200~max400mm
440mm
+10°
-10°
150mm
52mm
90mm
max2085mm
min1220~max1620mm
336mm
425.8mm
60mm
120mm
Ø75
875mm